Trinity College Dublin
Coláiste na Tríonóide, Baile Átha Cliath
The University of Dublin

Disentangled Accent Modeling for Neural Voice Conversion

Project Preview Presentations

Focus: Machine Learning & Neural Speech Processing

Team: Yupeng ZHAO • Weirong YE • An QIU

Research Background & Objectives

Context:

Voice Conversion (VC): Transferring speaker identity while preserving linguistic content.

Applications ：

Movie dubbing and cross-lingual language learning.
Speaking assistance and stylistic singing conversion.

The Challenge:

Existing high-quality models require **parallel utterances**, which are scarce in real-world data.

Objective:

Develop an **unsupervised, non-parallel, many-to-many** VC framework without text labels.

** Dialects of English in UK and Ireland*

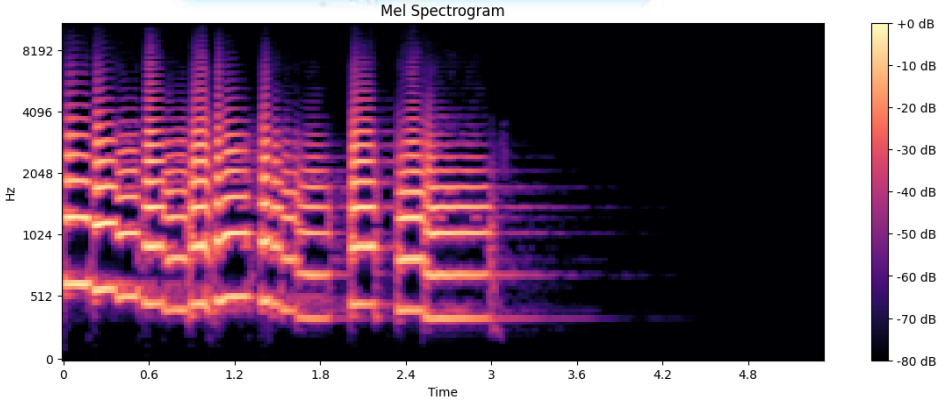

Feature Extraction: Mel-spectrogram Representation

Literature Review

Cross-domain Innovation: Successfully adapted StarGAN v2 from image style transfer to voice conversion.
Novel Loss Architecture: Introduced Adversarial Source Classifier loss to significantly boost speaker similarity.
Advanced Perception: First to jointly employ ASR and F0 perceptual losses for linguistic and pitch consistency.

Source: [University of Edinburgh VCTK Corpus (2019)]

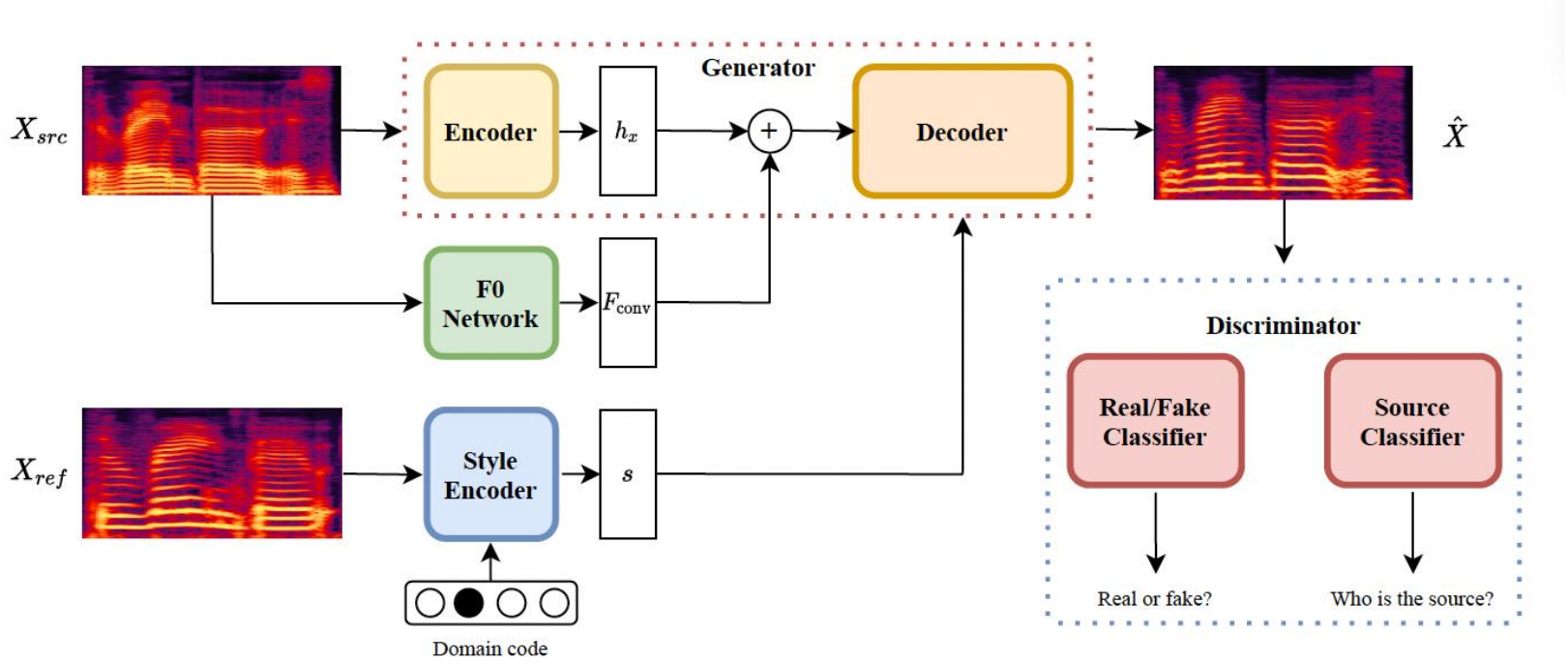

Our Contributions

Dataset Expansion & Diversity:
- Scale training beyond 20 speakers to improve model robustness for unseen voices.
- Incorporate diverse Irish and UK English dialects to capture subtle prosodic nuances.

Enhanced Cross-lingual Mapping :
- Implement multi-language phonetic pre-training to refine identity transfer across different languages.

Optimized Data Pipeline :
- Standardized pre-processing: Unified sampling rates and automated silence removal (VAD).
- Fixed-length segmenting to ensure high **GPU utilization** and faster convergence.

Dynamic Learning Strategy :
- Replaced the fixed learning rate (0.0001) with a **Learning Rate Scheduler** (e.g., Cosine Annealing).
- Accelerated training efficiency and achieved better global minima.

Unified full-stack platform:
- Engineered a unified web-based platform that couples the StarGANv2-VC engine with state-of-the-art **STT and NMT** models.

Real-time voice conversion:
- Built a low-latency recording-to-conversion pipeline for live speech input.
- Reduced end-to-end processing delay to improve user interaction and demo usability.

Metrix

Method	pMOS	CLS	CER
Ground truth	4.02 ± 0.46	98.67%	11.47%
Our Model (Enhanced)	$\mathbf{4.01 \pm 0.41}$	**96.70%**	**12.43%**
Full StarGANv2-VC	3.95 ± 0.50	96.20%	12.55%
$\lambda_{f0} = 0$	3.99 ± 0.54	96.50%	13.02%
$\lambda_{asr} = 0$	3.95 ± 0.53	96.90%	30.34%
$\lambda_{norm} = 0$	3.83 ± 0.47	96.30%	15.58%
$\lambda_{advcls} = 0$	3.98 ± 0.45	63.90%	12.33%
AUTO-VC	3.43 ± 0.51	50.30%	47.43%

Demo

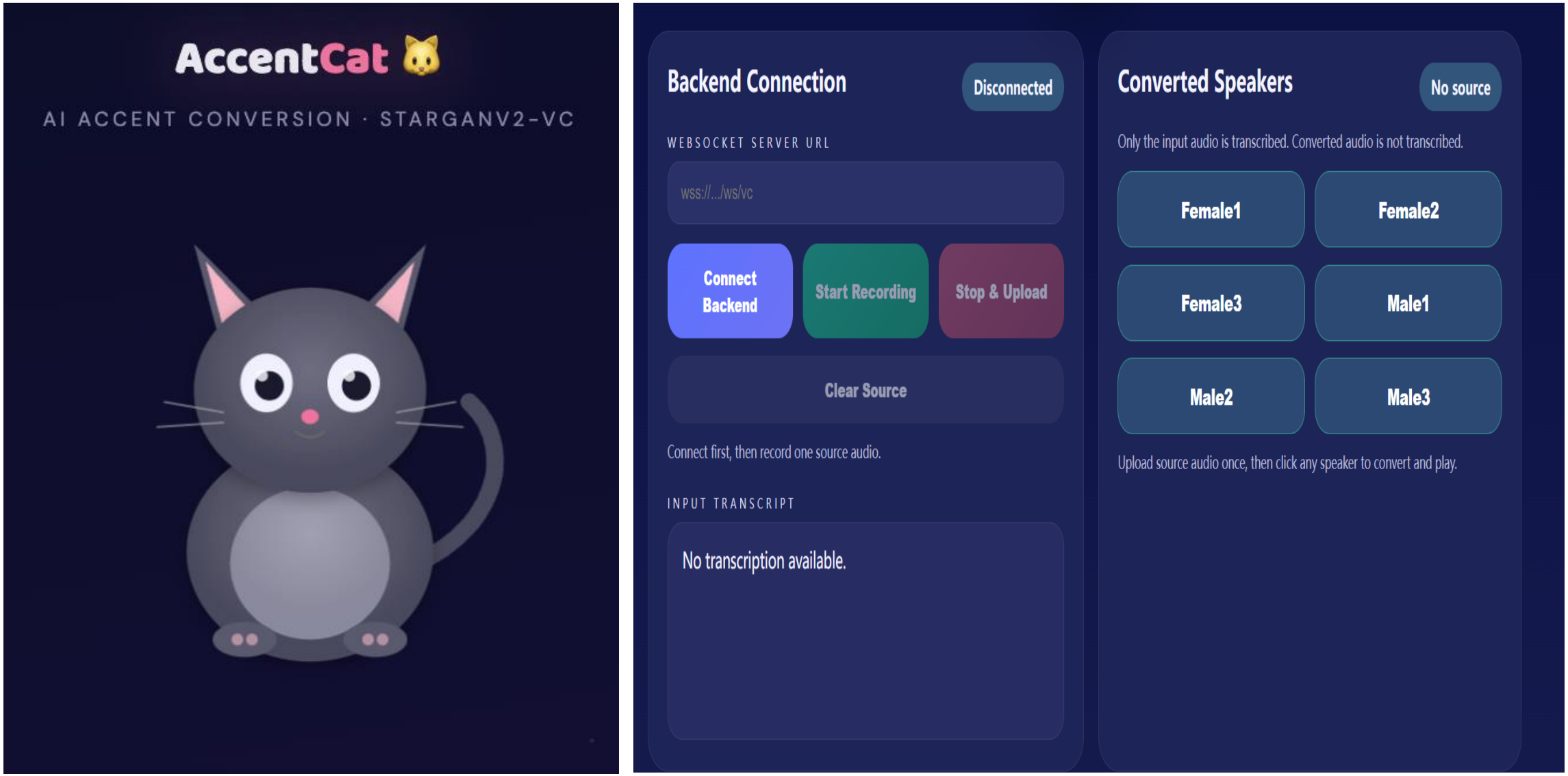
AccentCat
AI ACCENT CONVERSION · STARGANV2-VC
Backend Connection
Disconnected
WEBSOCKET SERVER URL
wss://.../ws/vc
Connect Backend
Start Recording
Stop & Upload
Clear Source
Connect first, then record one source audio.
INPUT TRANSCRIPT
No transcription available.
Converted Speakers
No source
Only the input audio is transcribed. Converted audio is not transcribed.
Female1
Female2
Female3
Male1
Male2
Male3
Upload source audio once, then click any speaker to convert and play.

Technical Roadmap

Refinement of Stylistic & Cross-lingual Synthesis

- Implementing **Phonetic Posteriorgrams (PPGs)** to decouple speaker identity from linguistic content more effectively for low-resource languages.
- Enhancing high-frequency audio fidelity in **Singing Voice Conversion (SVC)** by integrating periodic-information-guided generators.

Real-time System Optimization & Low-Latency Deployment

- Optimizing the convolutional generator architecture for **Edge-AI deployment** using model quantization and pruning techniques.
- Replacing the current Parallel WaveGAN with **BigVGAN or HiFi-GAN** to achieve faster-than-real-time synthesis with superior OOD (Out-of-Distribution) robustness.

Advanced Evaluation Framework

- Developing an automated **Subjective-Objective correlation** engine that uses human-in-the-loop feedback to fine-tune the source classifier’s boundary.
- Expanding the classification (CLS) matrix to include **unseen dialect recognition** to test the model's true zero-shot generalization capabilities.